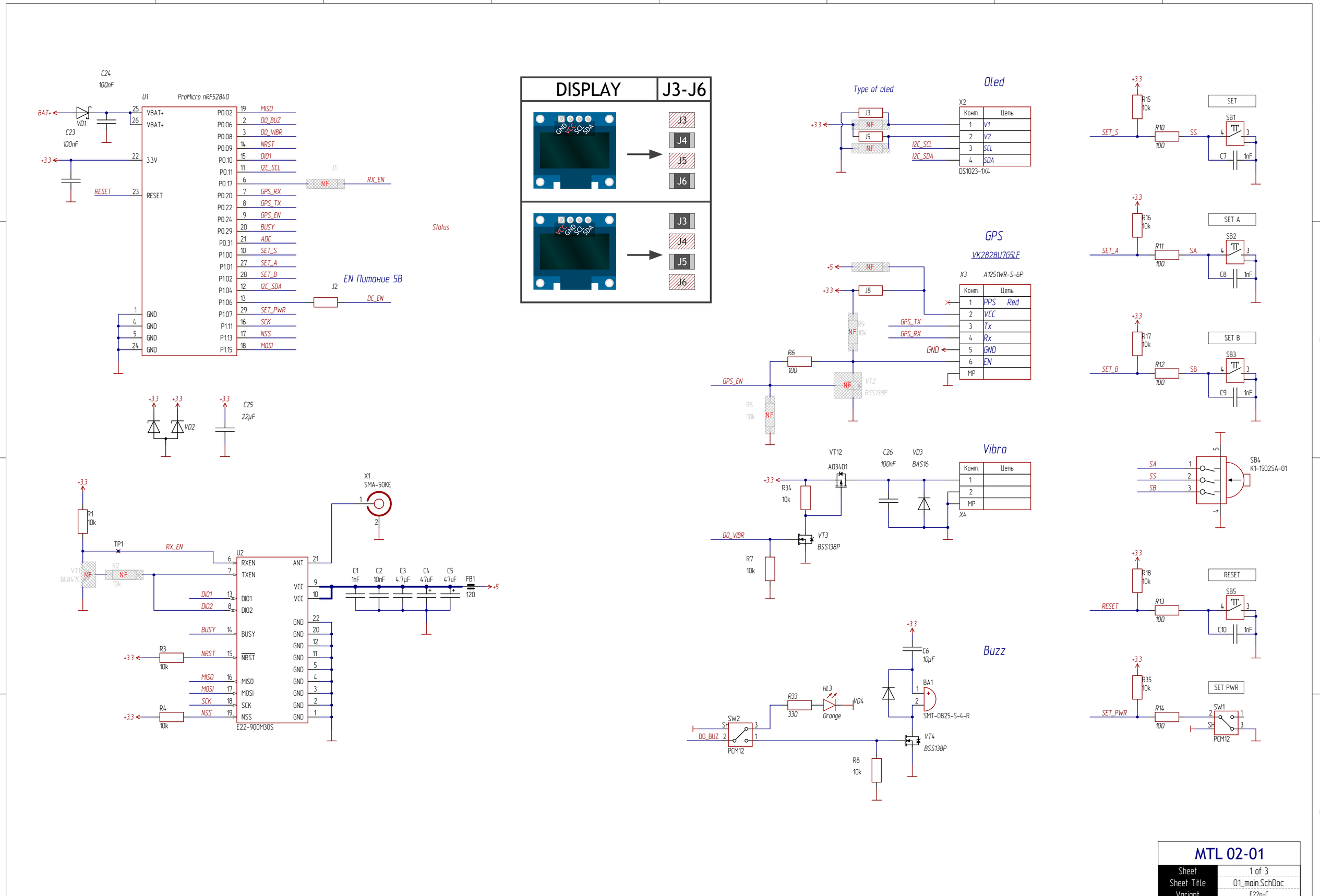

MTL 02-01	
Sheet	1 of 3
Sheet Title	01_main.SchDoc
Variant	E22p-C

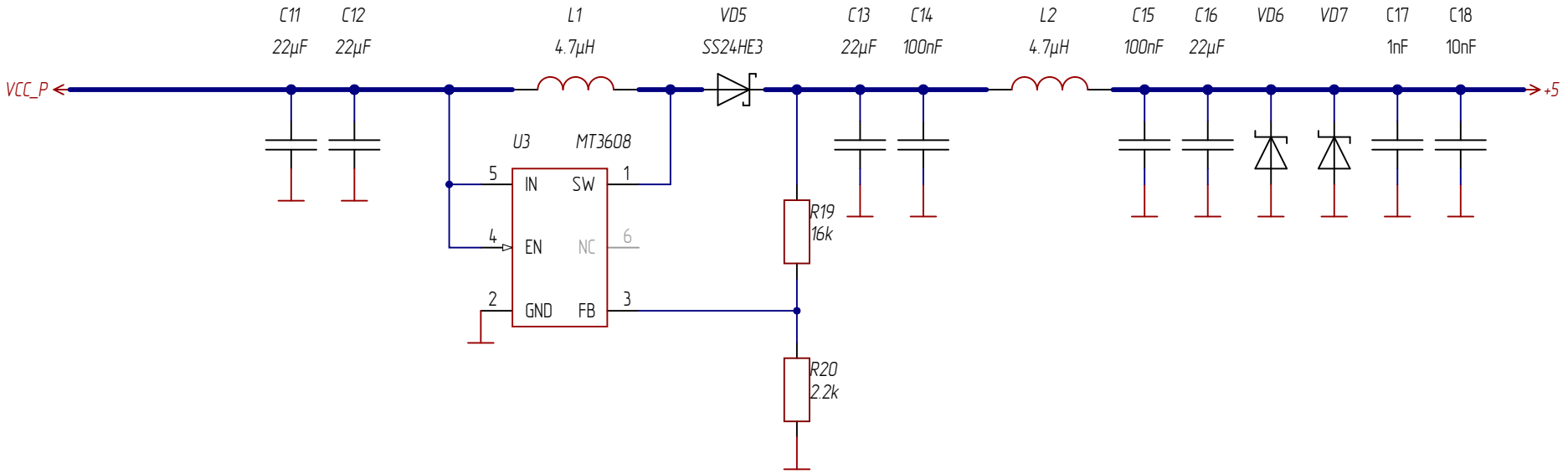

MTL 02-01

Sheet	2 of 3
Sheet Title	02_DC.SchDoc
Variant	E22p-C

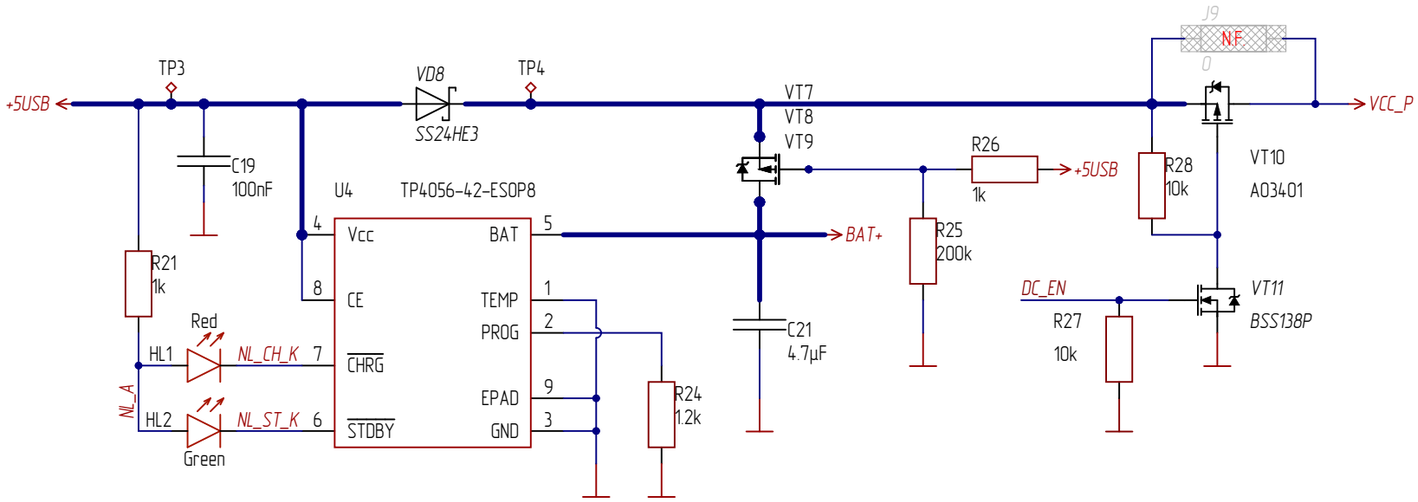

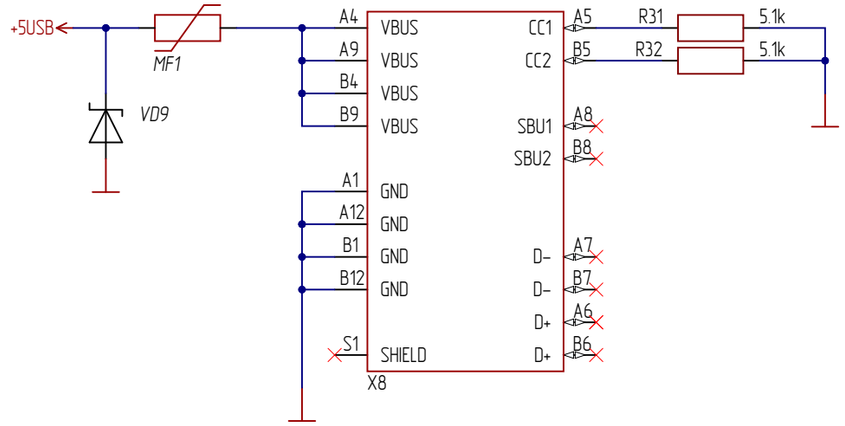

X5

	Конт.	Цепь
BAT+	1	
BAT-	2	
BAT+	3	
BAT-	4	

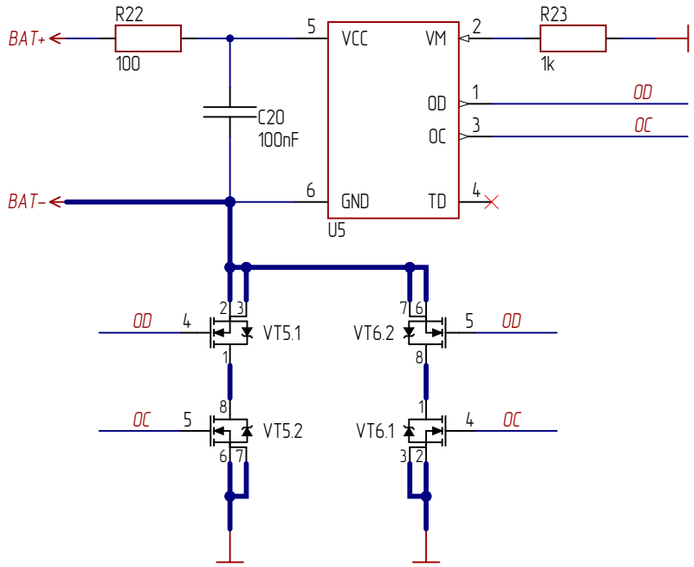

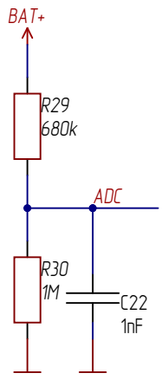

MTL 02-01

Sheet	3 of 3
Sheet Title	03_Bat.SchDoc
Variant	E22p-C